KLH®

MADE FOR BUILDING
BUILT FOR LIVING

COMPONENT CATALOGUE FOR
MULTI-STOREY RESIDENTIAL BUILDINGS

IMPRINT

Version: Component Catalogue for Multi-storey Residential Buildings, 10/2019

Publisher and responsible for content: © KLH Massivholz GmbH

The content of this brochure is the intellectual property of the company and is protected by copyright.
The statements are recommendations and suggestions only; liability on the part of the publisher is excluded.
Any type of reproduction is strictly forbidden and only permitted after written approval from the publisher.

KLH® and the KLH®-logo are internationally registered trademark rights of KLH Massivholz GmbH.
The fact that a mark is not included in the list and/or not indicated as registered trademark (brand)
in a text, cannot be interpreted that way that this mark is not a registered trademark (brand)
and/or that this mark could be used without prior written acceptance of KLH Massivholz GmbH.

CONTENT

GENERAL PRINCIPLES 04
CONSTRUCTION SYSTEMS 07
01 FLOOR PLAN TYPES FOR KLH® – BS 01 08
02 FLOOR PLAN TYPES FOR KLH® – BS 02 10
03 FLOOR PLAN TYPES FOR KLH® – BS 03 11
04 FLOOR PLAN TYPES FOR KLH® – BS 04 12
05 FLOOR PLAN TYPES FOR KLH® – BS 05 13
06 DETAIL KLH® – BS 01-1 14
07 DETAIL KLH® – BS 01-2 15
08 DETAIL KLH® – BS 01-3 16
09 DETAIL KLH® – BS 01-4 17
10 DETAIL KLH® – BS 01-5 18
11 DETAIL KLH® – BS 01-6 19
12 DETAIL KLH® – BS 01-7 20
13 DETAIL KLH® – BS 01-8 21
14 DETAIL KLH® – BS 02-1 22
15 DETAIL KLH® – BS 03-1 23
16 DETAIL KLH® – BS 03-2 24
17 DETAIL KLH® – BS 03-3 25
18 DETAIL KLH® – BS 04-1 26
19 DETAIL KLH® – BS 05-1 27
20 DETAIL KLH® – BS 05-2 28
21 DETAIL KLH® – BS 05-3 29

MULTI-STOREY RESIDENTIAL **BUILDINGS**

Numerous residential building projects have already been built successfully with KLH® solid wood panels – from detached houses to multi-storey blocks of flats and even the currently highest solid wood building in the world with 8 KLH® storeys, located in London.

Besides the static aspects and requirements of constructional physics, the main focus in residential building is on noise protection.

Noise protection requirements vary from one building project to another. Detached houses usually do not have any special indoor requirements in this regard, while partition ceilings and partition walls in multi-storey buildings have high requirements. In addition, many European countries have their own, individual, national requirements.

Currently, noise protection requirements are the highest in Scandinavian countries, and they can only be met with complex constructions. Southern-European countries, on the other hand, allow simpler, more cost-effective wall and ceiling structures that fully meet the local noise protection regulations.

This Construction Component Catalogue includes a number of designs and certified components with their respective measured values. The data was partly measured in laboratories, partly on completed buildings or especially set-up test constructions.
The positive feedback from satisfied residents shows that the requirements concerning “noise protection in solid wood construction” have been met successfully. However, we still recommend contracting the services of an expert on building physics.

KLH®

GENERAL PRINCIPLES

NOISE PROTECTION

This Construction Component Catalogue contains a number of certified component structures with their relevant measured values. Many of the measurements were made in laboratories (construction components without side paths), most of them, however, were made on completed buildings. Apart from direct sound paths through individual building components, the side paths are also of importance.

The stated noise protection levels can only be attained in combination with the suggested sound-technical decoupling (e.g. installation of elastic bearings between KLH® wall and ceiling components) as well as facing formwork elements, for example. The detailed solutions are intended to be recommendations by the manufacturer. The construction suggestions included should illustrate the constructional principle of the individual building methods. Please keep in mind that changes to materials and/or thicknesses of layers will lead to changes in noise protection values. Nearly all construction projects are unique in some aspects. Therefore, it is recommended that the services of an expert in building physics for detailed planning be contracted, if the requirements concerning noise and/or heat insulation, for example, are very high.

STATICS AND KLH® PANEL THICKNESSES

The panel thicknesses of the individual building components (wall, ceiling, roof) must be determined according to the static requirements. For normal room sizes in residential buildings we can assume walls from 90 to 130 mm (e.g. load-bearing interior wall on the ground floor of a 4-storey residential building) and ceilings from about 140 to 200 mm of panel thickness. A thorough static analysis is absolutely necessary.

Apart from the deflection of vertical loads, the safe deflection of horizontal forces must be kept in mind. Depending on the relevant location, there might be earthquake forces in addition to wind forces. The reinforcement of buildings in wood construction is an essential part of static calculations. In this regard the KLH® solid wood panels are advantageous, while small-sized panel structures often need tension anchoring for foundations and also between storeys, leading to a worse sound-technical situation. When using large-sized solid wood panels, even wall areas with door or window openings can be used for load-bearing purposes. The lever arms of the walls are increased considerably, and tension anchorage can often be avoided.

Sound measurement in completed buildings also takes connections (angle brackets, screw connections) into consideration.
Therefore, the results of measurements also include the effects of screw connections in the areas of elastic bearings.

FIRE RESISTANCE

Proof has to be provided for the load-bearing capacity of each component in case of a fire ("R" criterion) in the form of a static calculation. The European Technical Assessment ETA-06/0138 clearly defines the burn-off rates for KLH® components. Proof is based on the residual cross-sections according to Eurocode 5.

If the surfaces of KLH® solid wood panels are protected from fire in the beginning, e.g. by drywall fire protection boards, then the failure time of panel layers may be taken into account for dimensioning.

Multi-layer KLH® solid wood panels also allow the construction of components with high fire-resistance ratings, and proof can be provided for R90 or R120, for example. This way, 5-layer ceiling panels already reach R60 without any additional measures or even R90 if the panel thickness is sufficient, making visible-grain constructions with high fire resistance easy to realise.

If necessary, panel layers or higher panel thickness can further improve the fire resistance of any construction. For wall components, the required fire resistance is usually achieved with panel layers, since, for example, with 3-layer KLH® wall panels you can merely reach a maximum fire resistance rating of R30.

It also needs to be taken into account that load-bearing interior walls will usually burn down on both sides. For exterior walls, special attention must be paid to pillars between windows and doors.

INSTALLATIONS

For most of the building projects, installations were realised the usual way.
Fillings and suspended ceilings were used for cable routing. In load-bearing interior and exterior walls, vertical milled ducts were made (keep a minimum distance of 10 cm from the panel edge and only mill in the direction of the top layer orientation).

As far as "wall ends" are concerned (e.g. next to doors), it has to be taken into account that the static load-bearing capacity may be reduced by up to 30% in case of a large number of cabling. A static analysis has to be made in individual cases.

As regards partition walls in apartments, any such points with reduced load-bearing capacities should not be positioned opposite each other, but shifted by approx. 1 m, for sound reasons. It would be even better to avoid installations in partition components altogether or to keep them to an absolute minimum.

In case of a large number of cables, as well as water pipes and sanitary installations, a curtain wall construction should always be made. In case of water piping, sufficient sound decoupling has to be ensured.

BUILDING PHYSICS

A wall should have a structure that is open for vapour diffusion in order to ensure that the wall absorbs moisture and dispenses it towards the inside, if necessary. This way you avoid the formation of condensation inside a wall structure and ensure a healthy and pleasant room climate.

Another basic principle is the layered wall structure. The KLH® construction forms the load-bearing, reinforcing and room-closing core. If the joints are designed carefully, they can be regarded as a windproof layer. It is essential to pay attention to the transition to concrete parts – sometimes they are carried out imprecisely.

On the outside of the solid wood panel, a convection barrier or vapour retarder is applied, depending on the type of insulation material and façade structure. This layer must be put across the entire surface. Joints have to be glued tight. The layer has to be connected to the adjacent building components such as concrete/cellar or windows/doors.

Constructions made of cross-laminated timber ("KLH®") may even be constructed without an additional flow-tight layer to the outside, if the joint sealing (joints between wall/ceiling, ceiling/wall, wall/wall, wall/window or doors, ceiling joints, penetrations, etc.) is carried out carefully as well as the sealing of penetrations at the glue lines (e.g., installation slots).

Careful realisation and appropriate positioning of joint tapes have to be ensured. It is essential to have precise connections and transitions to concrete parts. The design of sill plates sealed to the concrete structure (suitable adhesive tape) is regarded as the safest variant. Special attention must also be paid to protruding KLH® components running from the "warm" inside area to the "cold" outside area (e.g. protruding ceiling and roof panels). The joints between the individual KLH® elements (e.g. shiplap edge or covering board connection between lying elements) in the area of the sealing level must be sealed appropriately and permanently.

Subsequently, the insulation level and the façade are applied. If the insulation material is stiff enough, it can be fastened directly onto the walls (without intermediate brackets). The fastening will depend on the selected façade material.

FAÇADE

Apart from timber façades, rendered, slab and metal façades are also possible. The entire wall structure must be adjusted to the façade type. The building-physical requirements are decisive. The tighter the material of the outer shell, the more important the installation of a back-ventilation layer or tight vapour retarder or barrier. Static calculations must also be made for the wall and roof structures in each individual case.

OVERVIEW OF INDIVIDUAL BUILDING SYSTEMS (BS 01-05)

Passive house setting “Am Mühlweg”, Vienna

KLH® – BS 01
DOUBLE-LEAF APARTMENT PARTITION

Residential building “Spöttelgasse”, Vienna

KLH® – BS 02
SINGLE-LEAF APARTMENT PARTITION

Alpine hotel “Ammerwald”, Reutte

KLH® – BS 03
MODULAR CONSTRUCTION

“Town council senior citizens’ home”, Judenburg

KLH® – BS 04
ATTIC CONVERSION

Terraced house estate “Bieleweg”, Ludesch

KLH® – BS 05
TERRACED HOUSE

01 FLOOR PLAN TYPES TO KLH® – BS 01

1.1 TWO-LEAF APARTMENT PARTITION

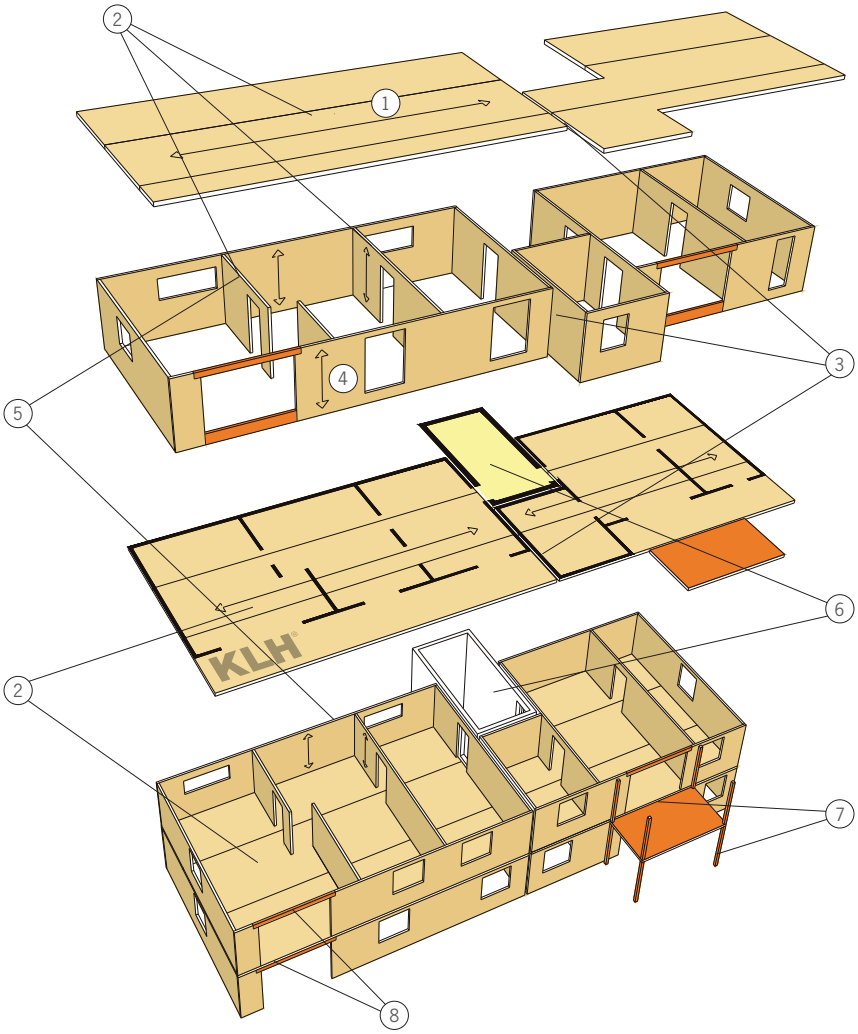

1. KLH® solid wood panels as ceilings
2. Ceilings as continuous girders over load-bearing inside walls
3. Complete separation of individual construction elements along the apartment partitions
4. KLH® solid wood panels as walls
5. Sound-technical decoupling on walls, if ceiling has suspended design – bearing under walls is also required if ceiling is not suspended
6. Staircase, e.g. in concrete; if designed as wooden support structure, the structure must be separated completely from the rest of the building
7. Balconies as self-supporting constructions placed in front of the building – connection for horizontal forces with elastic intermediate layers; solutions without supports in front are possible, but more complex to realise
8. Glue-laminated timber girders for larger openings (in façade or interior area)

See details – KLH® BS 01
1-leaf ceilings with screed structure and suspended ceiling
2-leaf apartment partitions
or
1-leaf ceilings with screed structure without suspended ceilings
2-leaf apartment partitions

1.2 TWO-LEAF APARTMENT PARTITION (VARIANT)

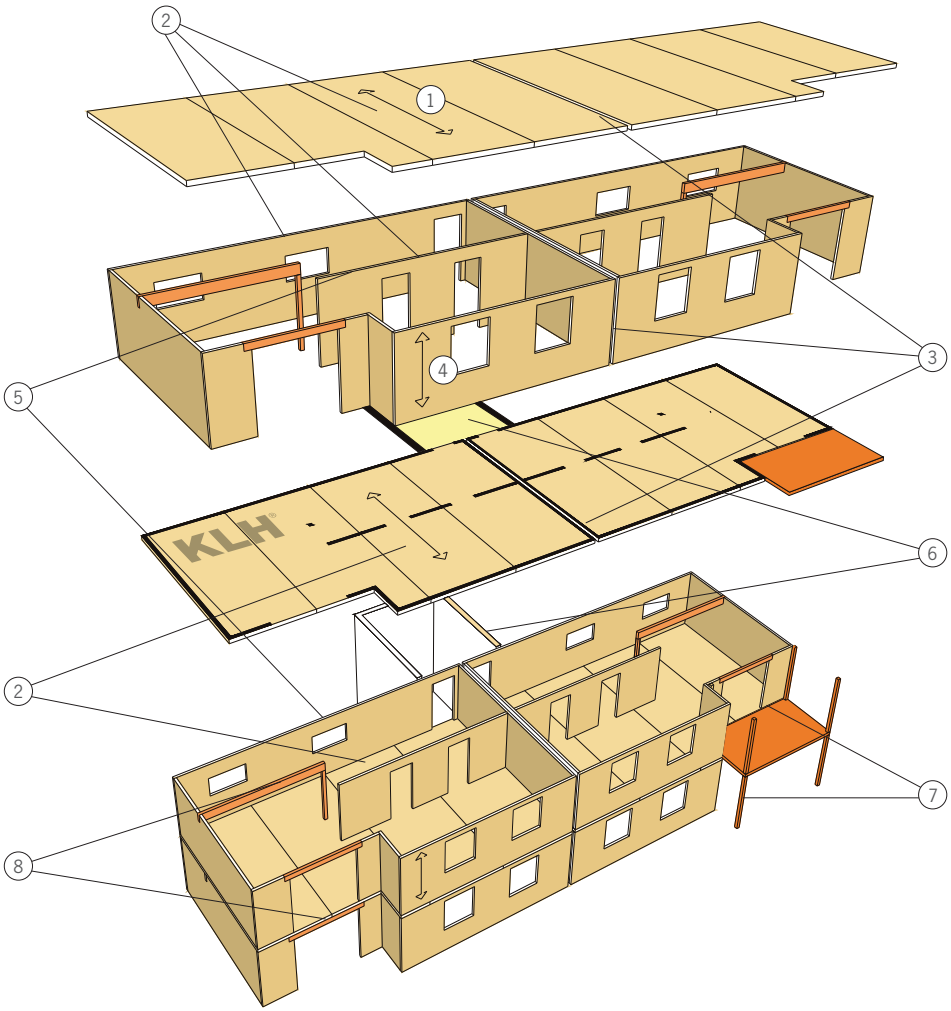

1. KLH® solid wood panels as ceilings
2. Ceilings as continuous girders over load-bearing inside walls
3. Complete separation of individual construction elements along the apartment partitions
4. KLH® solid wood panels as walls
5. Sound-technical decoupling on walls, if ceiling has suspended design – bearing under walls is also required if ceiling is not suspended
6. Staircase, e.g. in concrete; if designed as wooden support structure, the structure must be separated completely from the rest of the building
7. Balconies as self-supporting constructions placed in front of the building – connection for horizontal forces with elastic intermediate layers; solutions without supports in front are possible, but more complex to build
8. Glue-laminated timber girders for larger openings (in façade or interior area)

See details – KLH® BS 01
1-leaf ceilings with screed structure and suspended ceiling
2-leaf apartment partitions
or
1-leaf ceilings with screed structure without suspended ceilings
2-leaf apartment partitions

02 FLOOR PLAN TYPES TO KLH® – BS 02

2.1 SINGLE-LEAF APARTMENT PARTITION

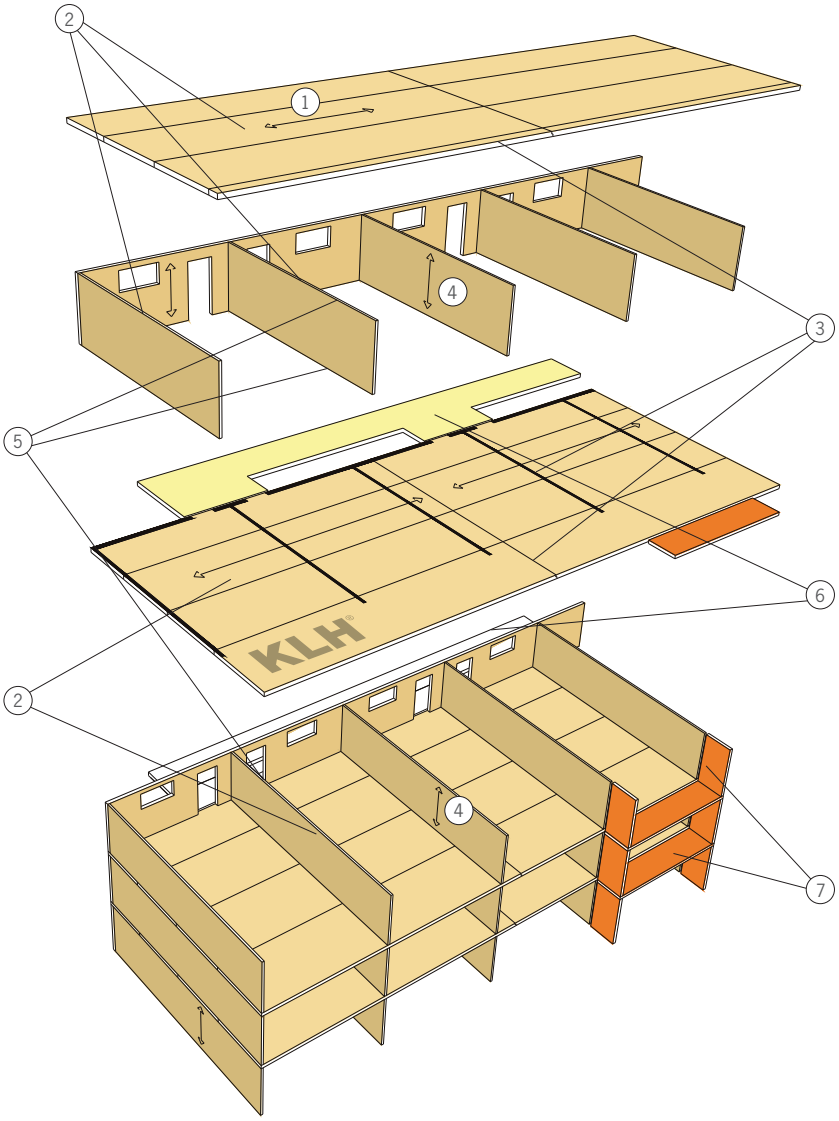

1. KLH® solid wood panels as ceiling
2. Ceilings as continuous girders over load-bearing inside walls
3. Ceilings as continuous girders also across apartment partitions – longitudinal joints in “zero momentum point”
4. KLH® solid wood panels as walls
5. No sound-technical bearing required – neither under nor over ceilings
6. Staircase and/or access corridors as separate building units – e.g. concrete constructions
7. Balconies as self-supporting constructions placed in front of the building – connection for horizontal forces with elastic intermediate layers

See details – KLH® BS 02
1-leaf ceilings with screed structure and suspended ceiling
1-leaf apartment partition with 2 facing formwork elements

03 FLOOR PLAN TYPES TO KLH® – BS 03

3.1 MODULAR CONSTRUCTION

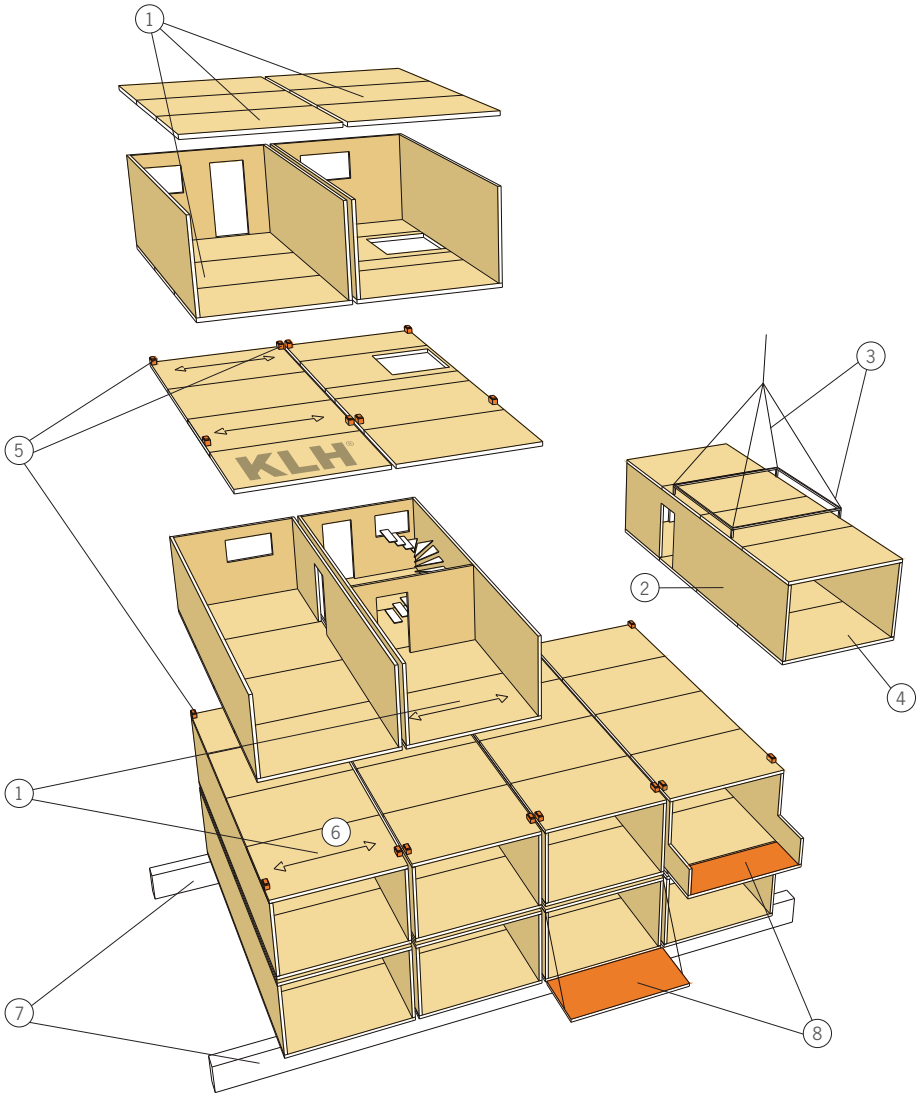

1. Ceiling and floor panels as one-span girders between load-bearing walls
2. KLH® solid wood panels as walls
3. The building units can be manipulated as prefabricated modules by way of simple steel structures
4. Completely opened façade areas are possible
5. Sound-technical bearing between modules
6. KLH® solid wood panels as floor and ceiling panels
7. Bearing of modules on strip and point foundations
8. Balconies can be integrated into load-bearing structure of the relevant module, since the modules are decoupled

See details – KLH® BS 03
2-leaf walls and ceilings (also possible for prefabricated room modules)

04 FLOOR PLAN TYPES TO KLH® – BS 04

4.1 ATTIC CONVERSION

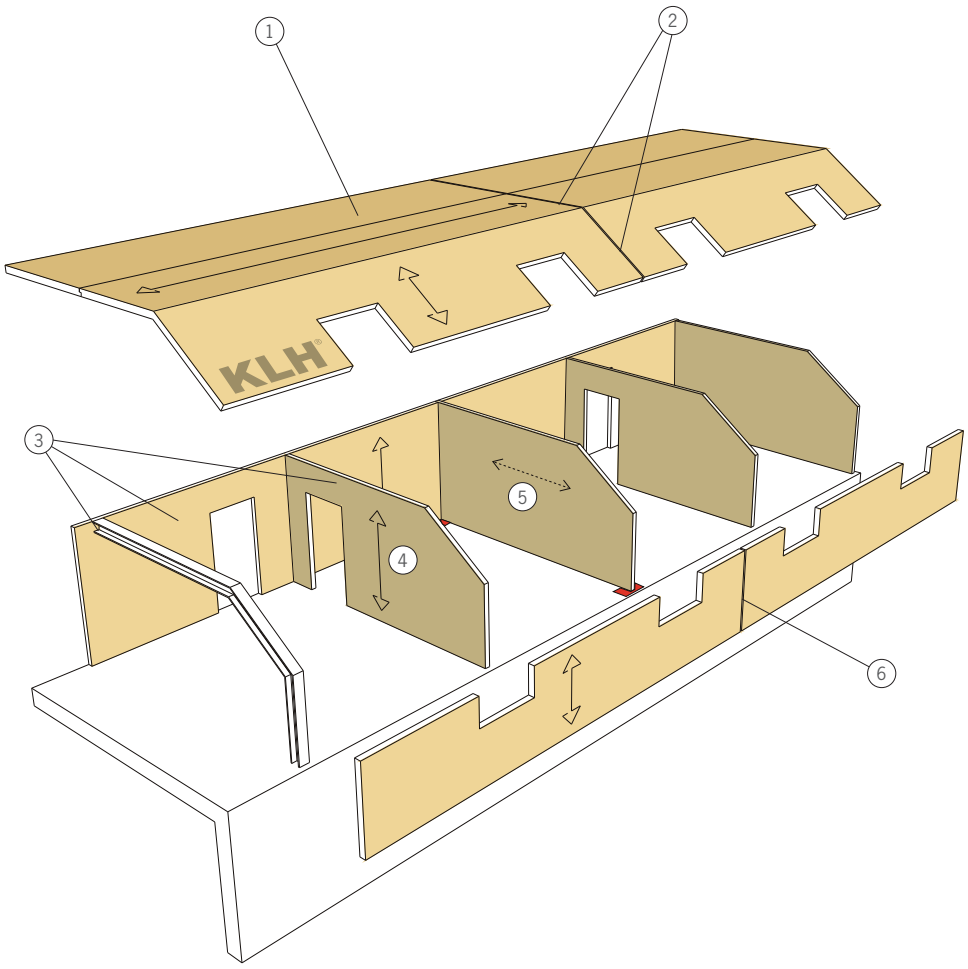

1. KLH® solid wood panels as ceiling and roof panels
2. Separation of roof panels at the apartment partition
3. Supporting walls in longitudinal and transverse directions or steel frame
4. KLH® solid wood panels as walls
5. Load-bearing effect, e.g. as freely supporting shear wall between 2 bearings
6. Separation of wall panels at apartment partition

See details – KLH® BS 04
1-leaf partition with facing formwork on both sides (especially for attic superstructures on old buildings)

05 FLOOR PLAN TYPES TO KLH® – BS 05

5.1 TERRACED HOUSE

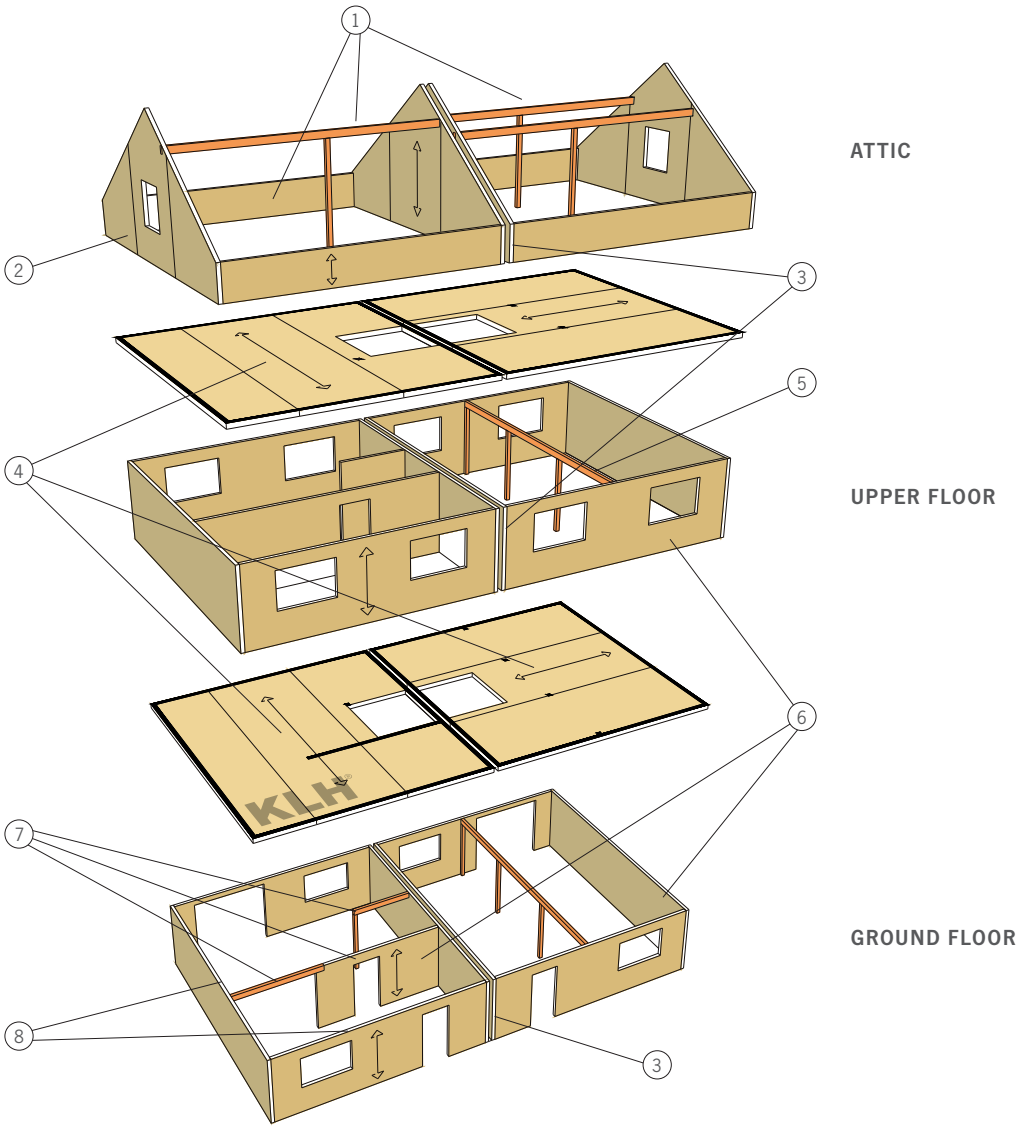

1. Attic, e.g. conventional rafter construction on purlins, wall plate/eaves purlin of KLH® panels
2. Gable walls of KLH® panels
3. Complete separation of both houses in the area of the partition
4. Ceilings of KLH® panels – designed as continuous girder is optimal
5. Inner load-bearing system as skeleton structure
6. Load-bearing inside and outside walls of KLH® panels
7. Inner load-bearing structure combined of laminated timber and KLH® panels
8. Normally no elastic bearing of ceilings is required, since there are no special noise protection requirements inside the apartment (exception: request by building owner)

See details – KLH® BS 05
2-leaf partition (no special sound-related requirements on the ceiling for terraced house types)

06 DETAIL KLH® – BS 01-1

6.1 NODAL POINT PARTITION CEILING – APARTMENT PARTITION

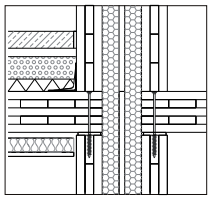

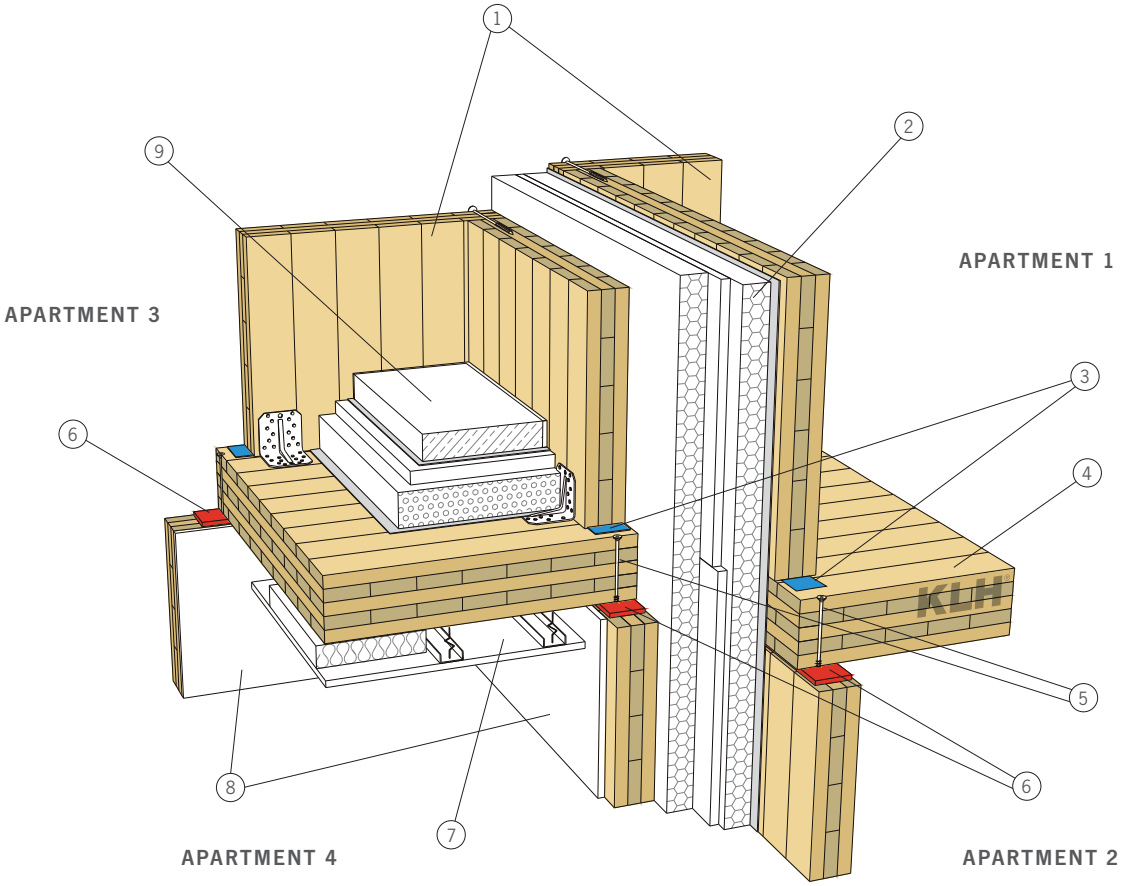

1. KLH® wall panel
2. Apartment partition
3. Install joint tape
4. KLH® ceiling panel
5. Screw connection according to statics
6. Elastic bearing
7. Suspended ceiling (approx. 7 cm air space with cavity damping)
8. Gypsum plasterboard facing
9. Floor structure

Apartment partition ceiling: WTD 01

$D_{nT,w}$ > 55 (-3;-9) dB
R'_w > 60 dB
$L'_{nT,w}$ < 46 (2) dB

Ceiling structure
5 to 7 cm screed
Screed film
3 cm TSDP
6 cm filling, unbound
Trickle protection (if necessary)
KLH® ceiling panel
Suspended ceiling

Apartment partition: WTW 2s 06

$D_{nT,w}$ > 55 (-5;-14) dB
R_w > 64 (-3;-10) dB

Wall structure
15 mm GKF
KLH® wall panel
Flow-tight layer
60 mm Heralan TW
12.5 mm GK plasterboard
60 mm Heralan TW
KLH® wall panel
15 mm GKF

07 DETAIL KLH® – BS 01-2

7.1 NODAL POINT PARTITION CEILING – LOAD-BEARING INTERIOR WALL

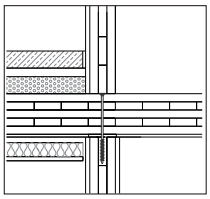

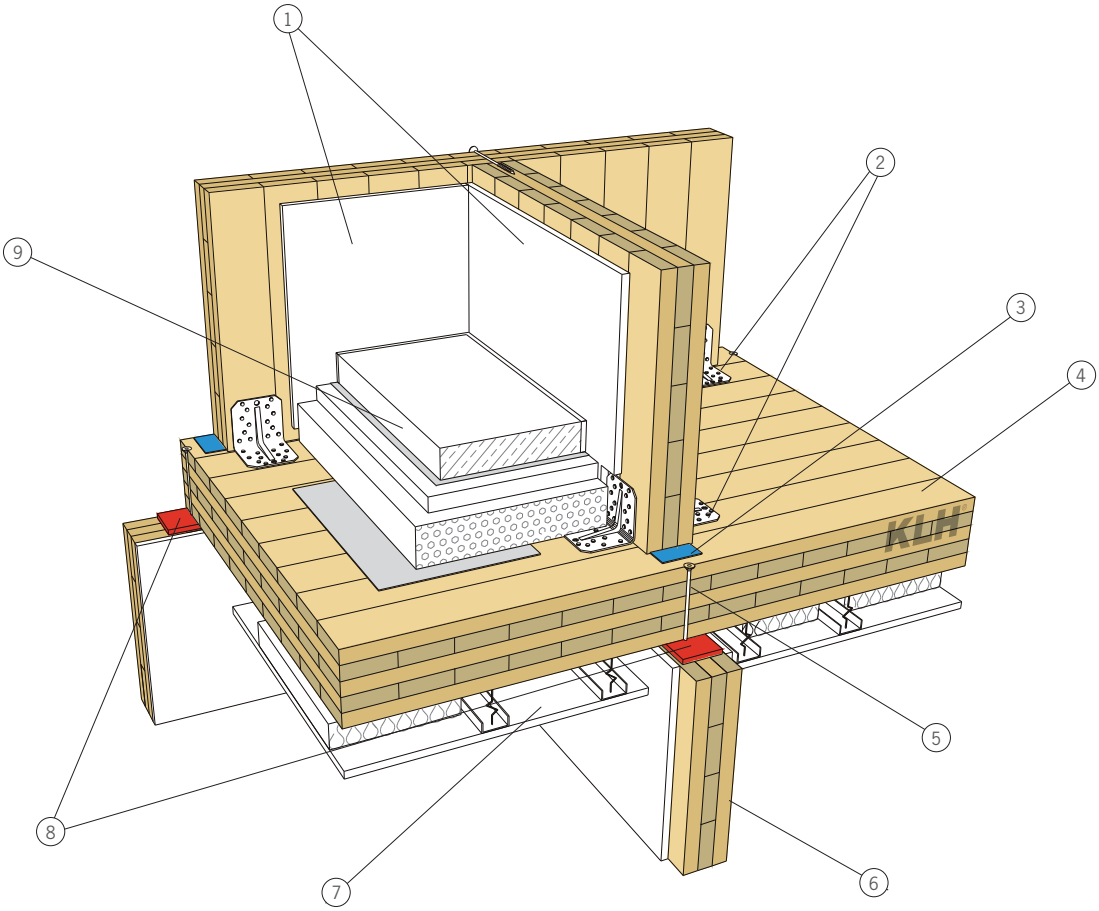

1. Gypsum plasterboard facing
2. BMF angle bracket for shear forces as well as minor tensile forces
3. Joint tape
4. KLH® ceiling panel
5. Screw connection according to statics
6. KLH® wall panel
7. Suspended ceiling (approx. 7 cm air space with cavity damping)
8. Elastic bearing for noise protection
9. Floor structure

Apartment partition ceiling: WTD 01

$D_{nT,w}$ > 55 (-3;-9) dB
R'_w > 60 dB
$L'_{nT,w}$ < 46 (2) dB

Ceiling structure
5 to 7 cm screed
Screed film
3 cm TSDP
6 cm filling, unbound
Trickle protection (if necessary)
KLH® ceiling panel
Suspended ceiling

08 DETAIL KLH® – BS 01-3

8.1 NODAL POINT PARTITION CEILING – EXTERIOR WALL, PREFABRICATED

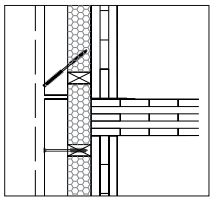

Assembly for prefabricated wall
With this design, a passive house level was achieved for the "Am Mühlweg" building project in Vienna (air tightness, insulation rating)

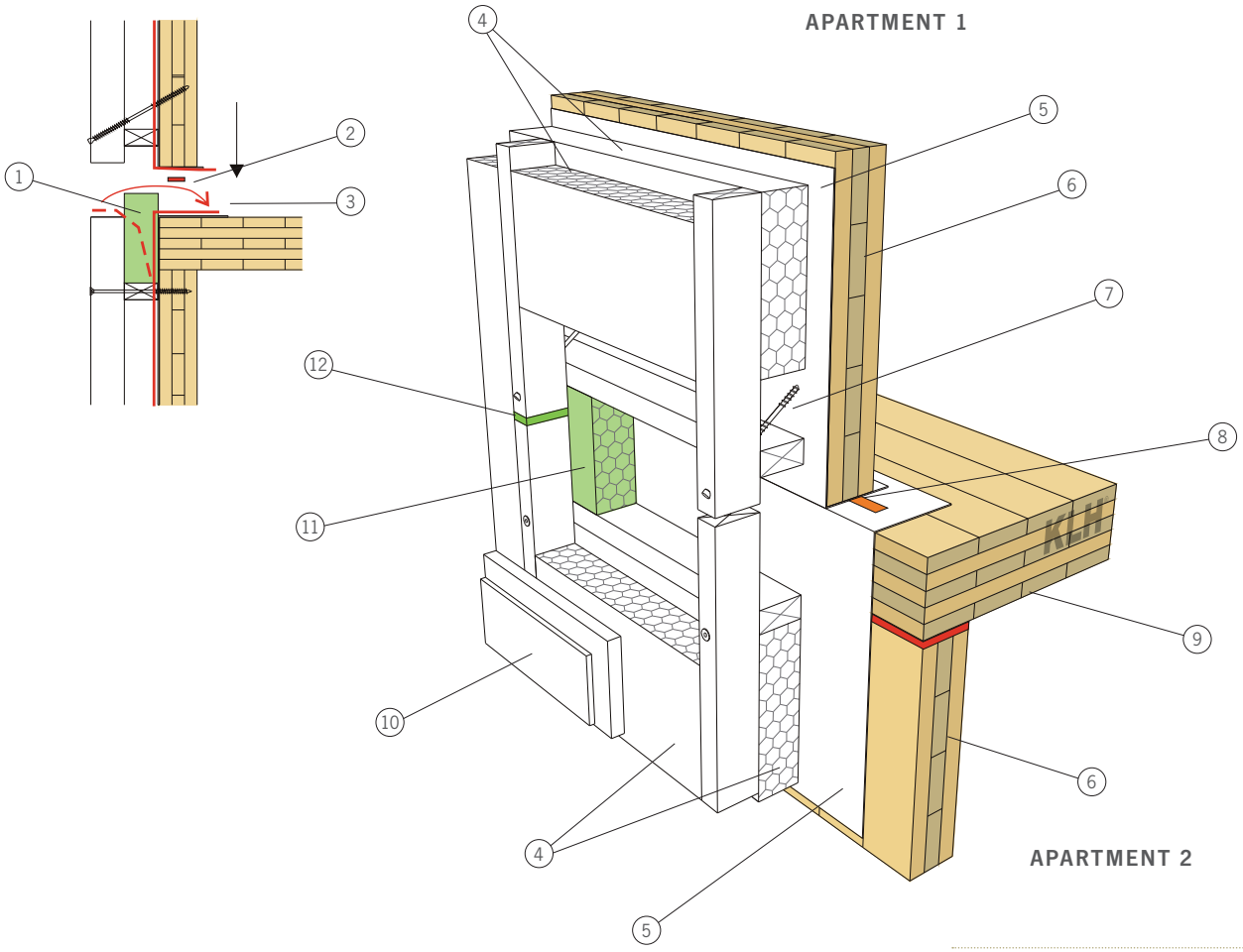

1. Install insulation tape on site
2. Insert sealing tape or glue tight on the inside
3. Fold in convection barrier
4. 2-layer heat insulation (approx. 2 x 14 cm for passive house)
5. Convection barrier (vapour tightness to be adjusted to further wall structure)
6. KLH® wall panel
7. Angled screw connection for "curtain façade" depending on static requirements
8. Sealing tape to connect individual convection barriers
9. KLH® ceiling panel
10. Plaster base and plaster permeable for diffusion
11. Insert insulation tape on site (if façade is prefabricated)
12. Joint

Apartment partition ceiling: WTD 01

$D_{nT,w}$ > 55 (-3;-9) dB
R'_w > 60 dB
$L'_{nT,w}$ < 46 (2) dB

Ceiling structure
5 to 7 cm screed
Screed film
3 cm TSDP
6 cm filling, unbound
Trickle protection (if necessary)
KLH® ceiling panel
Suspended ceiling

09 DETAIL KLH® – BS 01-4

9.1 CONNECTION EXTERIOR WALL – CEILING WITH ROOF TERRACE INCLUDED

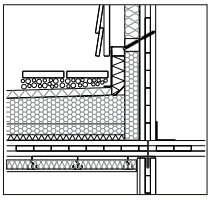

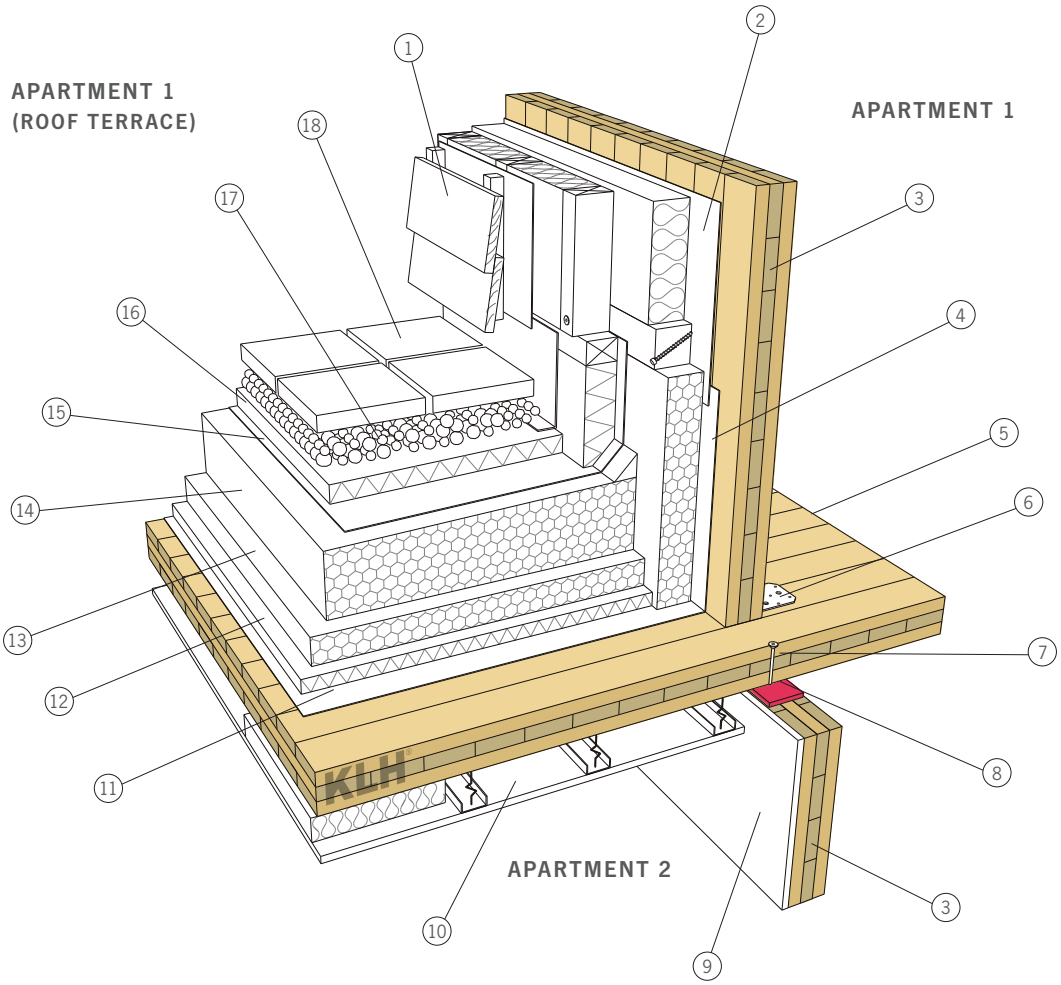

1. Back-ventilated façade
2. Convection barrier
3. KLH® wall panel
4. Put up vapour barrier in wall area
5. KLH® roof panel
6. BMF angle bracket for shear transmission
7. Screw connection according to statics
8. Elastic bearing
9. Plasterboard facing
10. Suspended ceiling (approx. 7 cm air space with cavity damping)
11. Vapour barrier (and makeshift sealing during building stage)
12. Footstep sound insulation board
13. Heat insulation
14. Slope wedge insulation
15. Moisture sealing (water-bearing layer)
16. Insulation boards to protect the sealing level
17. Gravel filling
18. Flagging

Exterior wall: AW 03

R'_w = 51(-2;-7) dB

Wall structure
Façade – wood
(board, planks – sealed)
Back-ventilation layer
(Battens screwed tight with KLH®)
2 x 80 mm rock wool across entire surface
(Heralan FP)
KLH 3s 94 mm
15 mm GKF

10 DETAIL KLH® – BS 01-5

10.1 FLOOR STRUCTURE, ROOF TERRACE WITH CONNECTION, TERRACE DOOR

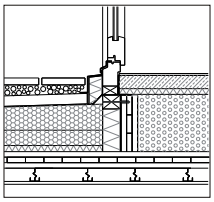

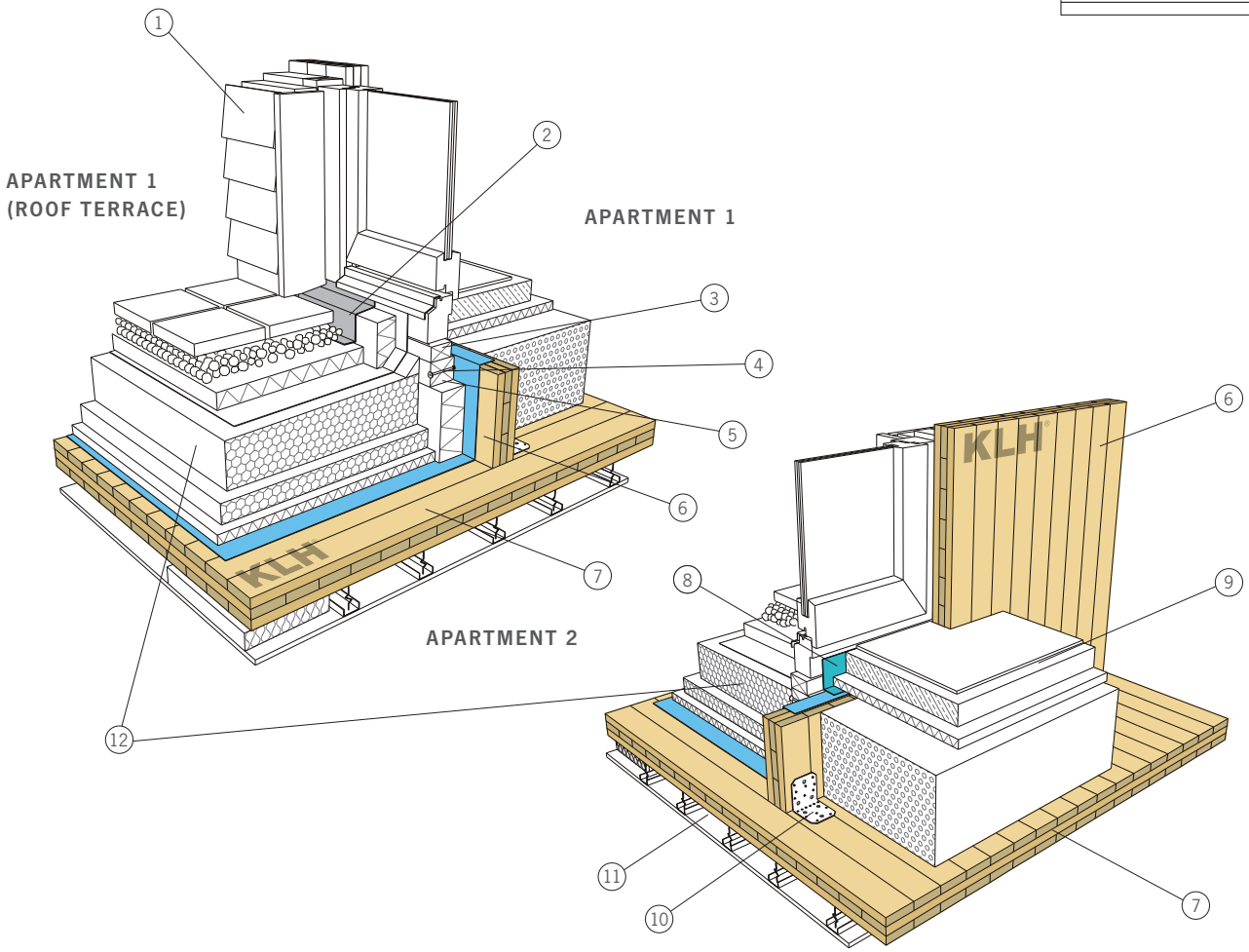

1. Back-ventilated wood façade
2. Metal cover plate
3. False floor edge
4. Subframe
5. Screw connection according to statics (own weight of door and window elements)
6. KLH® wall panel
7. KLH® ceiling panel
8. Close sealing level
9. Inside floor structure
10. BMF angle bracket
11. Suspended ceiling
12. Outside flat roof structure

Floor structure: inside

Flooring
Screed on screed film
TSDP
Perlite filling to level height differences and allow barrier-free access to the roof terrace

Flat roof structure: outside

Flagging
Gravel filling
Insulation boards
(Protection for sealing)
Sealing layer
Slope wedge insulation
Heat insulation
TSDP
Vapour barrier
KLH® ceiling panel
Suspended ceiling

11 DETAIL KLH® – BS 01-6

11.1 NODAL POINT APARTMENT PARTITION – CEILING PARTITION KLH® VISIBLE

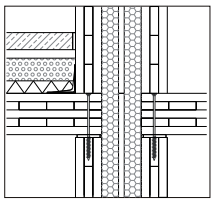

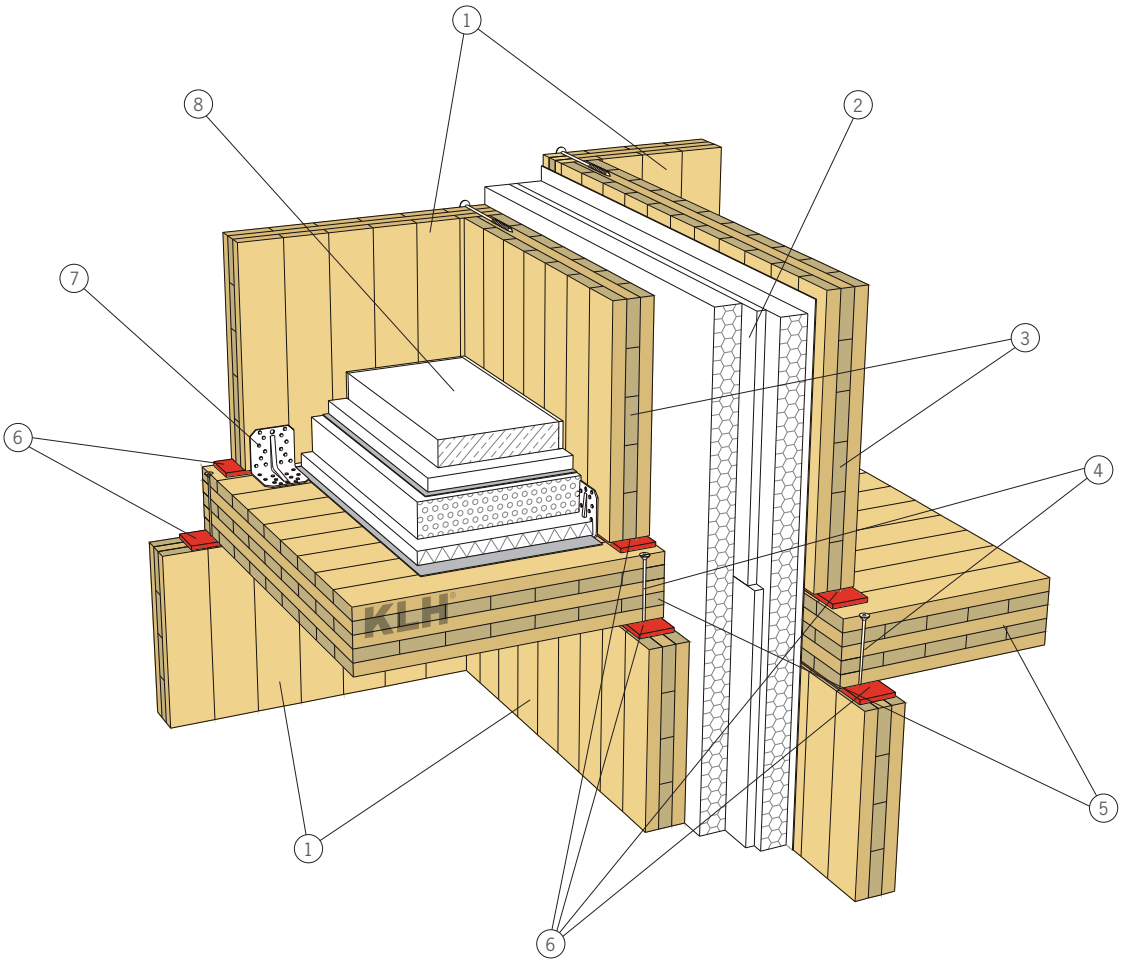

1. KLH® wall panel
2. Apartment partition
3. 3s KLH® wall panel
4. Screw connection according to statics
5. KLH® ceiling panel
6. Elastic bearing
7. BMF angle bracket
8. Floor structure

Apartment partition ceiling: WTD 05

$D_{nT,w}$ > ?? dB
R'_w > ?? dB
$L'_{nT,w}$ < 42 (1) dB

Ceiling structure
Screed
TSDP
Filling
Soft fibre panel
Trickle protection (if necessary)
KLH® ceiling panel – without suspended ceiling

Apartment partition: WTW 2s 06

$D_{nT,w}$ > 55 (-5;-14) dB
R_w > 64 (-3;-10) dB

Wall structure
15 mm GKF
KLH® wall panel
60 mm Heralan TW
12.5 mm GK plasterboard
60 mm Heralan TW
Wind sealing
KLH® wall panel
15 mm GKF

12 DETAIL KLH® – BS 01-7

12.1 NODAL POINT CEILING – LOAD-BEARING INTERIOR WALL / VARIANT WITH REDUCED NOISE PROTECTION REQUIREMENTS ON THE CEILING

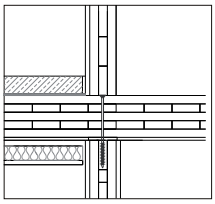

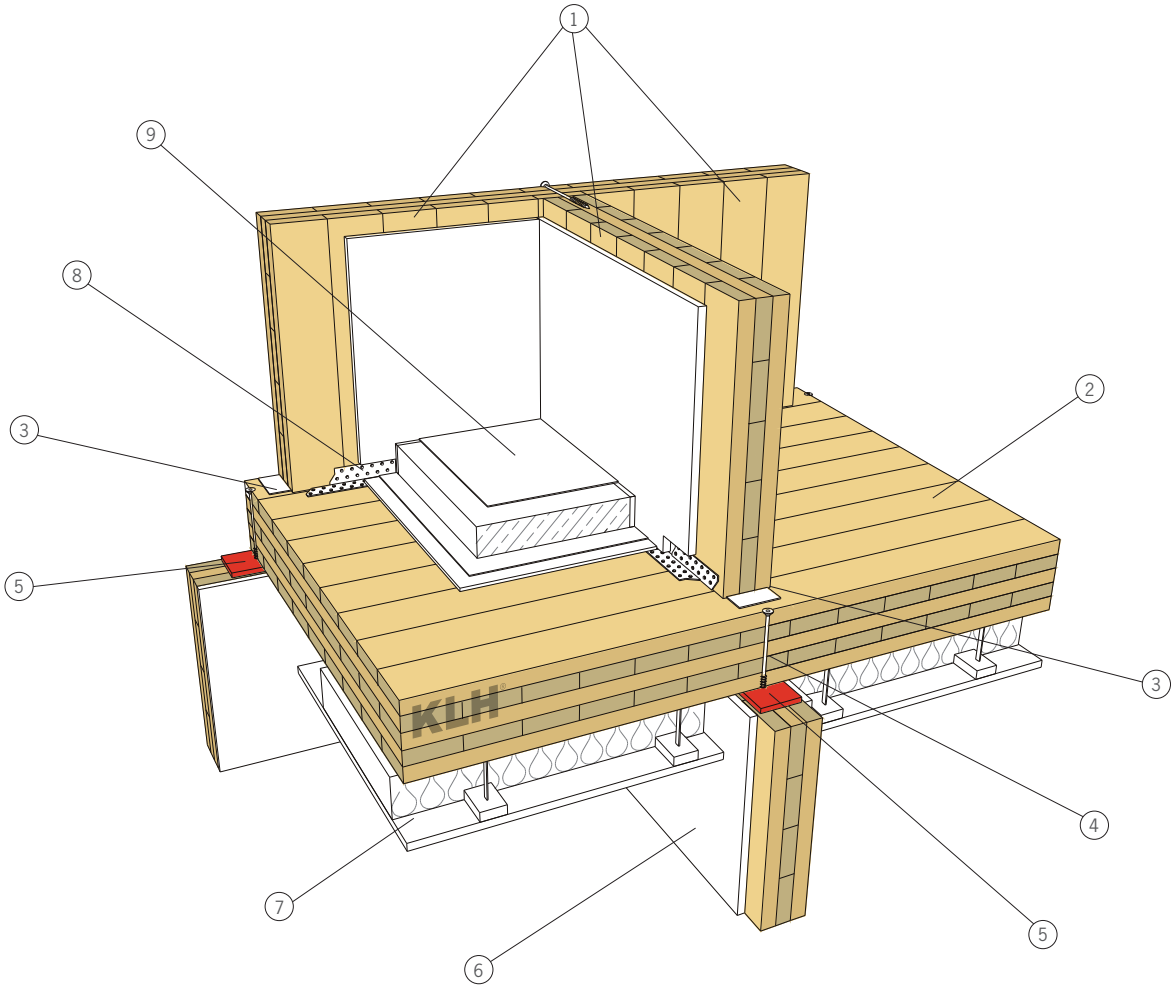

1. KLH® wall panel
2. KLH® ceiling panel
3. Joint tape
4. Screw connection according to statics
5. Elastic bearing
6. Gypsum plasterboard facing
7. Suspended ceiling (2 cm air, 8 cm mineral wool, 1.5 cm plasterboard)
8. Rafter-purling anchor for shear transmission
9. Floor structure

Apartment partition ceiling: WTD 06

R'_w > 60 (-1,-6) dB
$L'_{nT,w}$ < 50 (-1) dB
(with PVC flooring 48 (0) dB)

Ceiling structure
PVC flooring
6 cm screed
Film
0.6 cm soft fibre panel
KLH® ceiling panel
Suspended ceiling

13 DETAIL KLH® – BS 01-8

13.1 NODAL POINT CEILING – LOAD-BEARING INTERIOR WALL / VARIANT WITH REDUCED NOISE PROTECTION REQUIREMENTS ON THE CEILING

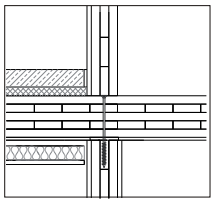

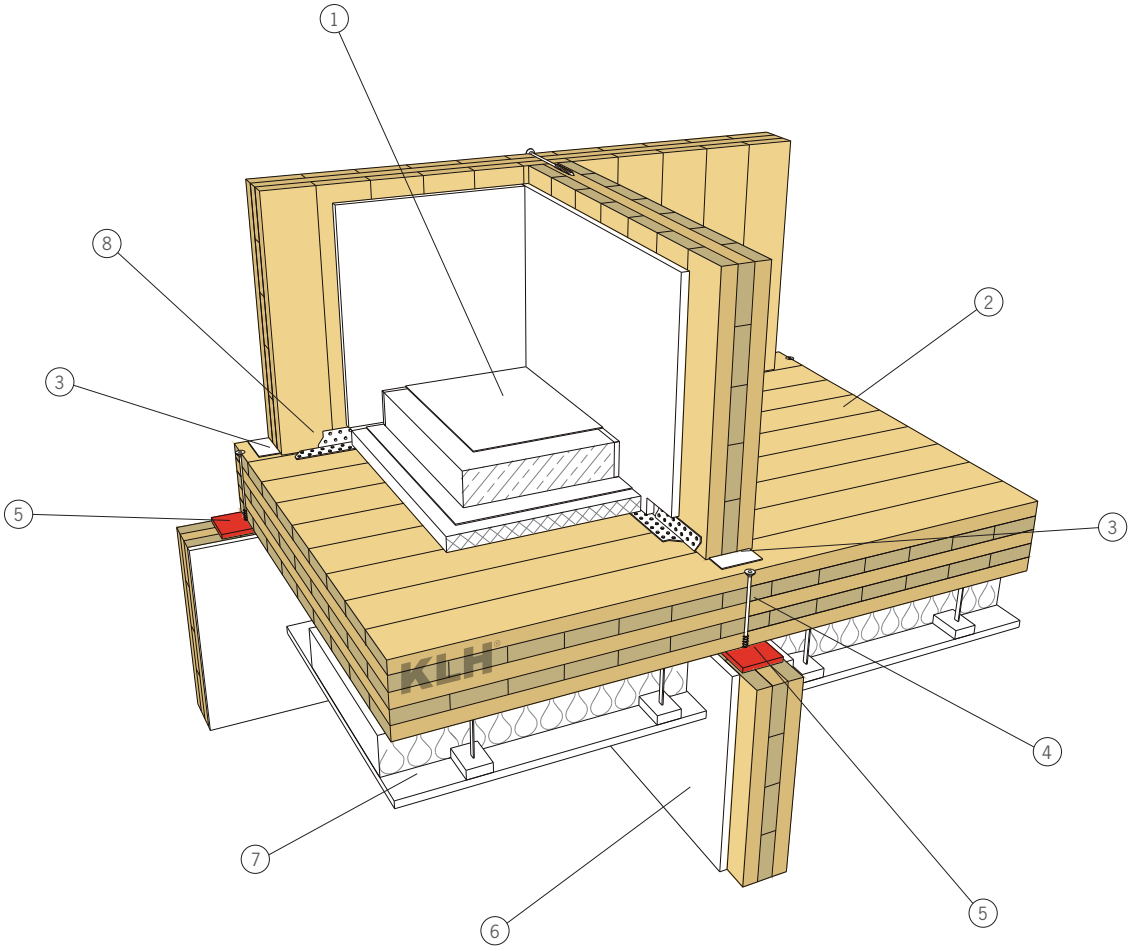

1. Floor structure
2. KLH® ceiling panel
3. Joint tape
4. Screw connection according to statics
5. Elastic bearing
6. Gypsum plasterboard facing
7. Suspended ceiling (2 cm air, 8 cm mineral wool, 1.5 cm plasterboard)
8. Rafter-purling anchor for shear transmission

Apartment partition ceiling: WTD 07

R'_w > 59 (-1,-6) dB
$L'_{nT,w}$ < 46 (2) dB
(with PVC flooring (1) dB)

Ceiling structure
PVC flooring
6 cm screed
Film
Rock wool TPS 30
KLH® ceiling panel
Suspended ceiling

14 DETAIL KLH® – BS 02-1

14.1 NODAL POINT PARTITION CEILING – APARTMENT PARTITION

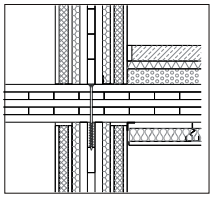

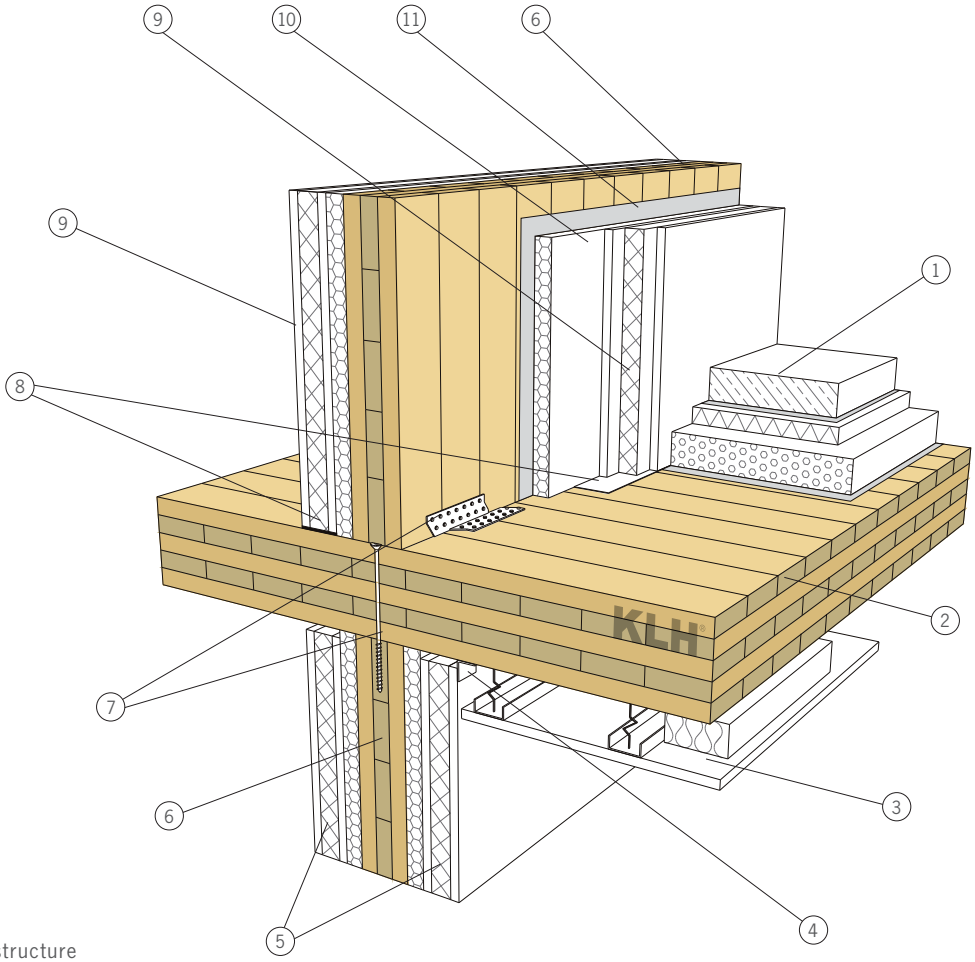

1. Floor structure
2. 5s KLH® ceiling panel
3. Suspended ceiling
4. Metal angle bracket for fastening of facing formwork on individual points
5. Stand-alone facing formwork in front of the KLH® panel
6. KLH® wall panel according to static requirements
7. Connection according to statics
8. Elastic base tape
9. Facing formwork, self-supporting:
   12.5 GK plasterboard panel
   25 mm Heraklith BM
   15 mm GKF panel, all 3 layers glued to one package, stand-alone in front of KLH® wall
10. TPS 25/22
11. Flow-tight layer

Apartment partition ceiling: WTD 01

$D_{nT,w}$ > 55 (-3;-9) dB
R'_w > 60 dB
$L'_{nT,w}$ < 46 (2) dB

Ceiling structure
5 to 7 cm screed
Screed film
3 cm TSDP
6 cm filling, unbound trickle protection (if necessary)
KLH® ceiling panel
Suspended ceiling

Apartment partition: WTW 1s xxt

$D_{nT,w}$ > 59 (-1;-7) dB
R'_w > 60 (-2;-8) dB
R_w > 63 (-3;-9) dB
REI 90 on both sides

Wall structure
Facing formwork, self-supporting
TPS 25/22
KLH® wall panel
Flow-tight layer
TPS 25/22
Facing formwork, self-supporting

15 DETAIL KLH® – BS 03-1

15.1 NODAL POINT PARTITION CEILING (DOUBLE-LEAF) – APARTMENT PARTITION

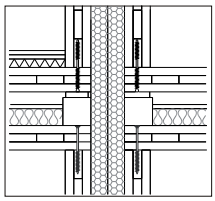

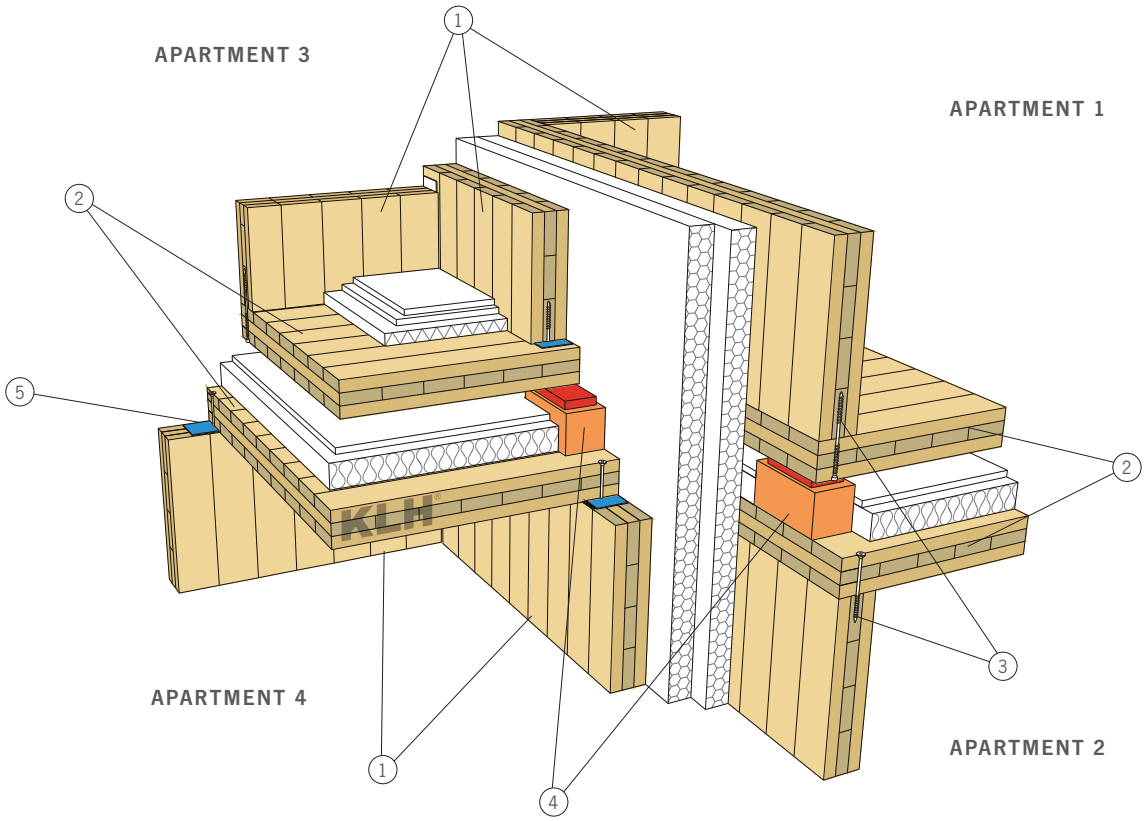

1. KLH® wall panel
2. KLH® ceiling panel
3. Screw connection according to statics
4. Bearing of upper room module on individual 20 mm elastomer bearing points (area according to static requirements)
5. Joint tape

Apartment partition ceiling: WTD 03

$D_{nT,w}$ = 57 (-1;-5) dB
R'_w = 58 (-1;-5) dB
$L'_{nT,w}$ = 43 (7) dB

Ceiling structure
Dry screed
(12.5 + 15 mm Feracell)
35 mm footstep sound insulation board
KLH® floor panel
Air space
12.5 mm GK panel
Insulation boards
(12 cm total distance between KLH® panels)
KLH® ceiling panel

Apartment partition: WTW 2s 05

$D_{nT,w}$ > 64 (-3;-9) dB
R'_w > 65 (-3;-9) dB
R_w > 60 (-4;-12) dB

Wall structure
15 mm GKF
KLH® wall panel
2 x 60 mm Heralan FP
KLH® wall panel
15 mm GKF

16 DETAIL KLH® – BS 03-2

16.1 CONNECTION OF PARTITION CEILING (2-LEAF) – EXTERIOR WALL

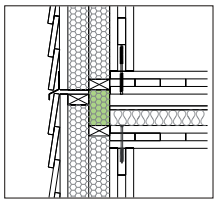

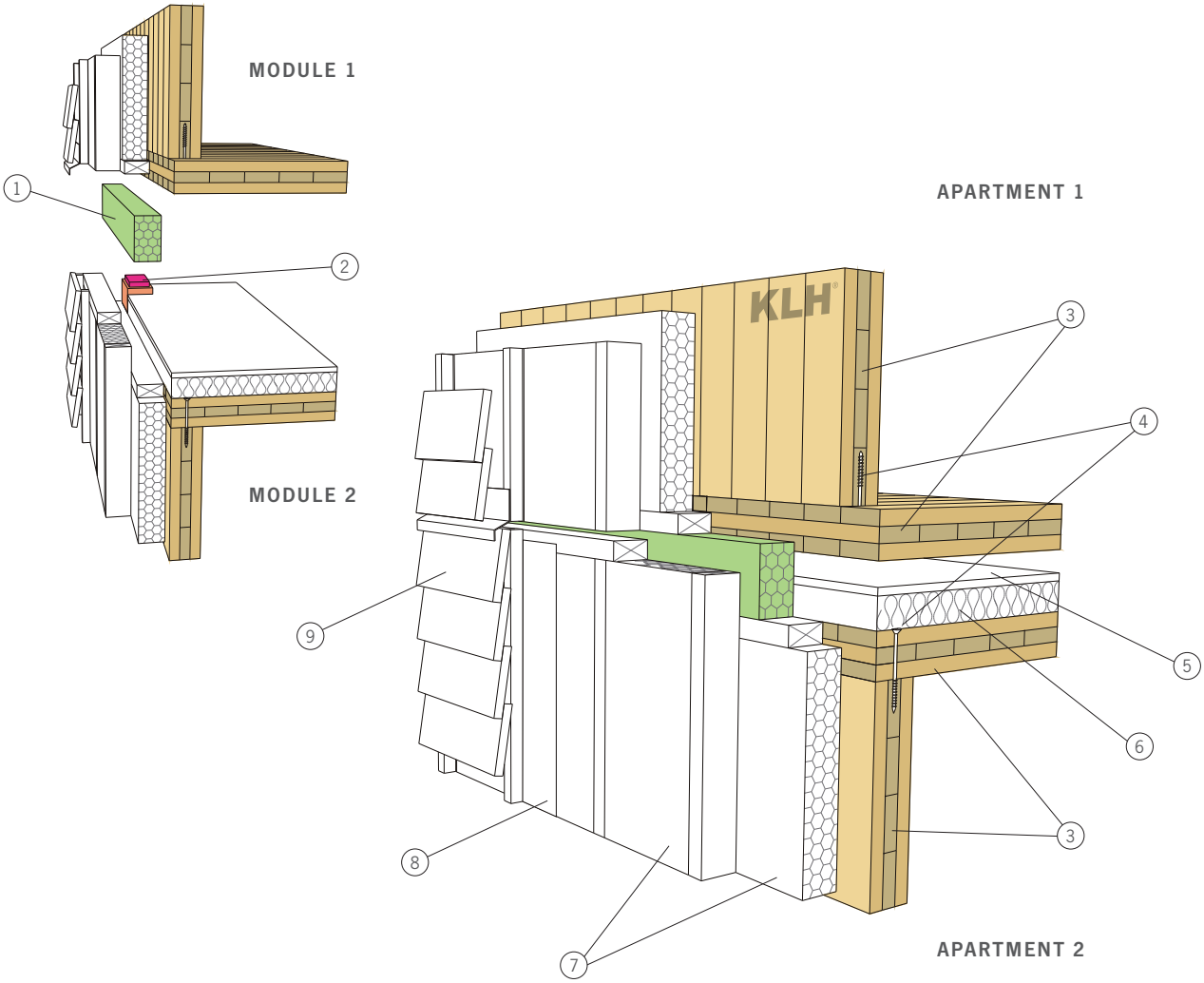

1. Install insulation tape on site (if room modules are prefabricated)
2. Point bearing for upper room module
3. KLH® panels
4. Screw connection according to static requirements
5. Gypsum plasterboard
6. Heat insulation
7. 2-layer heat insulation
8. Wind proofing
9. Back-ventilated façade

Exterior wall: AW 03

R'_w = 51(-2;-7) dB

Apartment partition ceiling: WTD 03

$D_{nT,w}$ = 57 (-1;-5) dB
R'_w = 58 (-1;-5) dB
$L'_{nT,w}$ = 43 (7) dB

17 DETAIL KLH® – BS 03-3

17.1 EXAMPLE OF ROOF TERRACE DESIGN

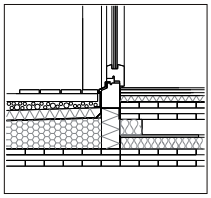

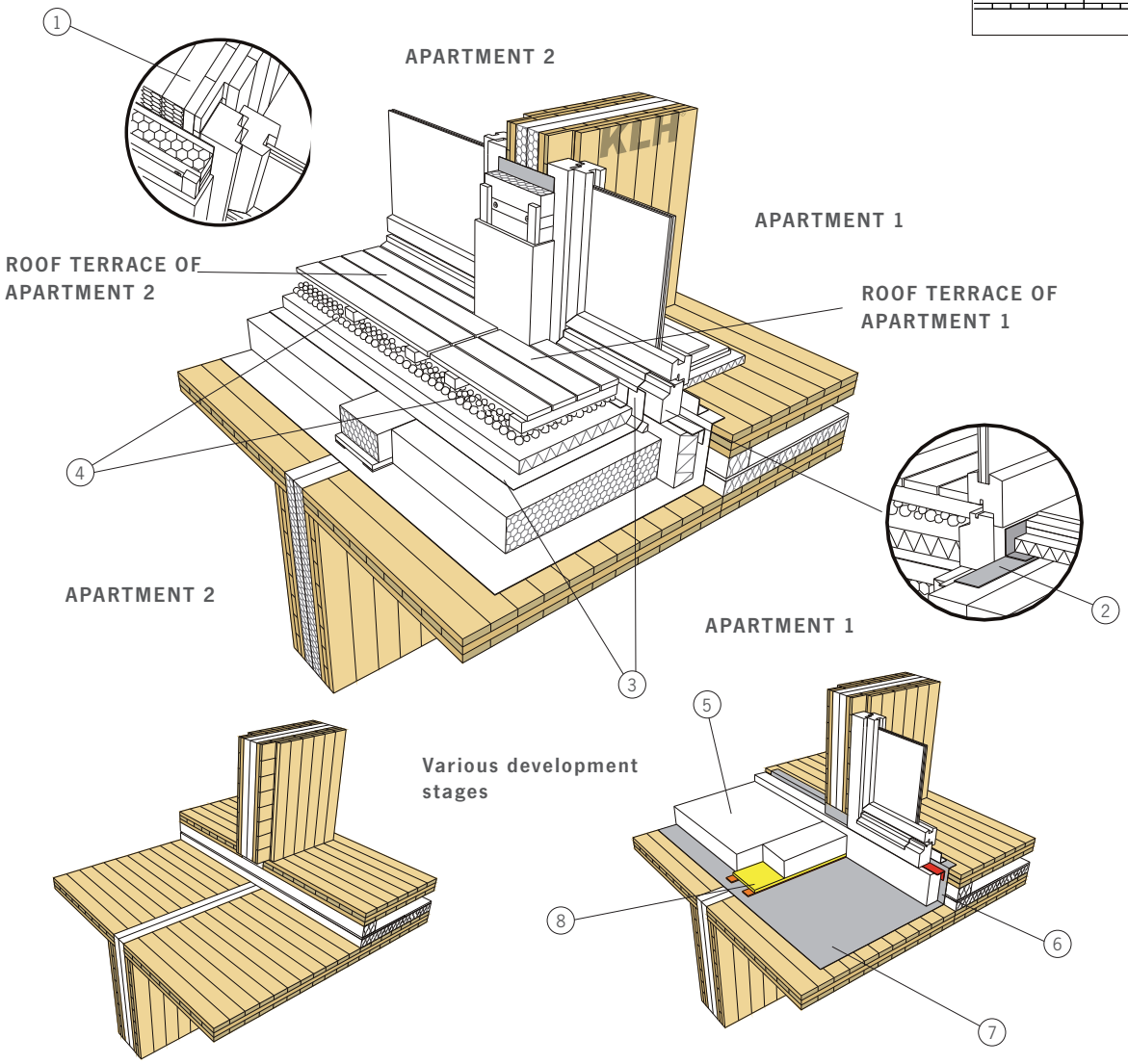

1. Make sure of sufficient sound insulation to adjacent module in case of window installations – only weaken KLH® panel slightly
2. Close the sealing level (vapour barrier from roof structure with window level)
3. Connect moisture sealing to window element
4. E.g. wooden grid in gravel bed, below insulation boards as protection for sealing levels
5. Insulation level (slope wedge insulation)
6. Raise vapour barrier
7. Vapour barrier
8. Mind joint closures – do not produce sound bridges

Apartment partition: WTW 2s 05

$D_{nT,w}$ > 64 (-3;-9) dB
R'_w > 65 (-3;-9) dB
R_w > 60 (-4;-12) dB

Apartment partition ceiling: WTD 03

$D_{nT,w}$ = 57 (-1;-5) dB
R'_w = 58 (-1;-5) dB
$L'_{nT,w}$ = 43 (7) dB

18 DETAIL KLH® – BS 04-1

18.1 CONNECTION OF WALL – ROOF

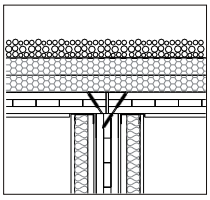

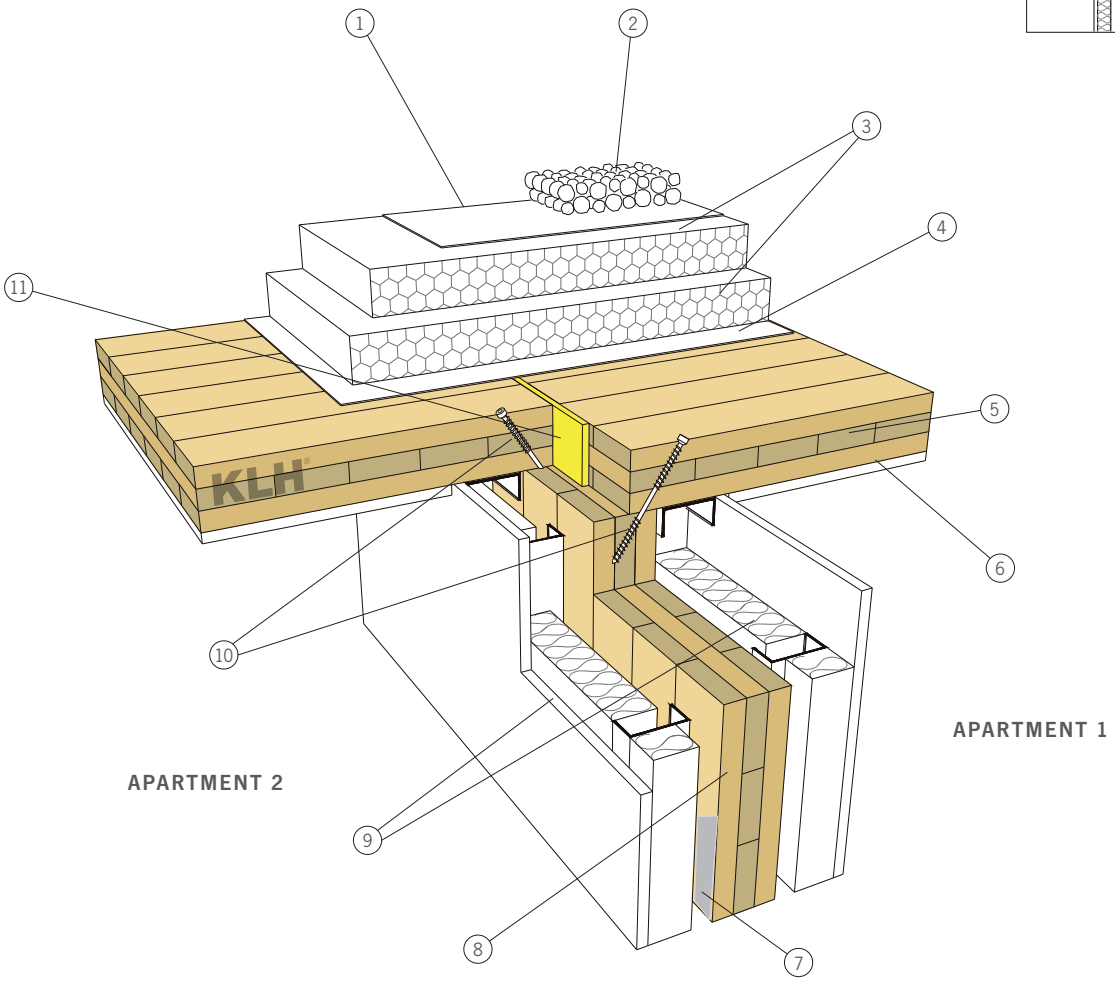

1. Moisture sealing
2. Gravel filling
3. Heat insulation (rock wool)
4. Vapour barrier
5. KLH® roof panel
6. Plasterboard soffit directly or better with suspension
7. Place flow-tight layer, if necessary
8. KLH® wall panel
9. Self-supporting metal stud partition with 15 mm distance to KLH® wall
10. Screw connection: secure positioning and shear transmission roof to wall
11. Fill joint between panels with noise protection foam

Apartment partition: WTW 1s vs

R_w > 58 (-3;-11) dB

Wall structure
15 mm GKF
60 mm Heralan TW on metal post or lath separate
Air space
KLH 3s 94 mm
Air space
60 mm Heralan TW on metal post or lath separate
15 mm GKF

Non-ventilated roof: FD film 01

R_w > 43 dB (-2;-8), measurement without gravel

Roof structure
Roof membrane – PVC
800 mm Heraklith DDP (fastened mechanically to KLH®)
Vapour barrier (e.g. Vedagard)
KLH® solid wood panel (according to static requirements)
Laminated timber rib glued tight to KLH® solid wood panel

19 DETAIL KLH® – BS 05-1

19.1 CONNECTION OF CEILING TO APARTMENT PARTITION

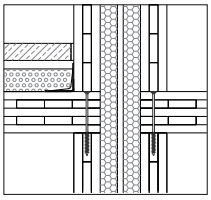

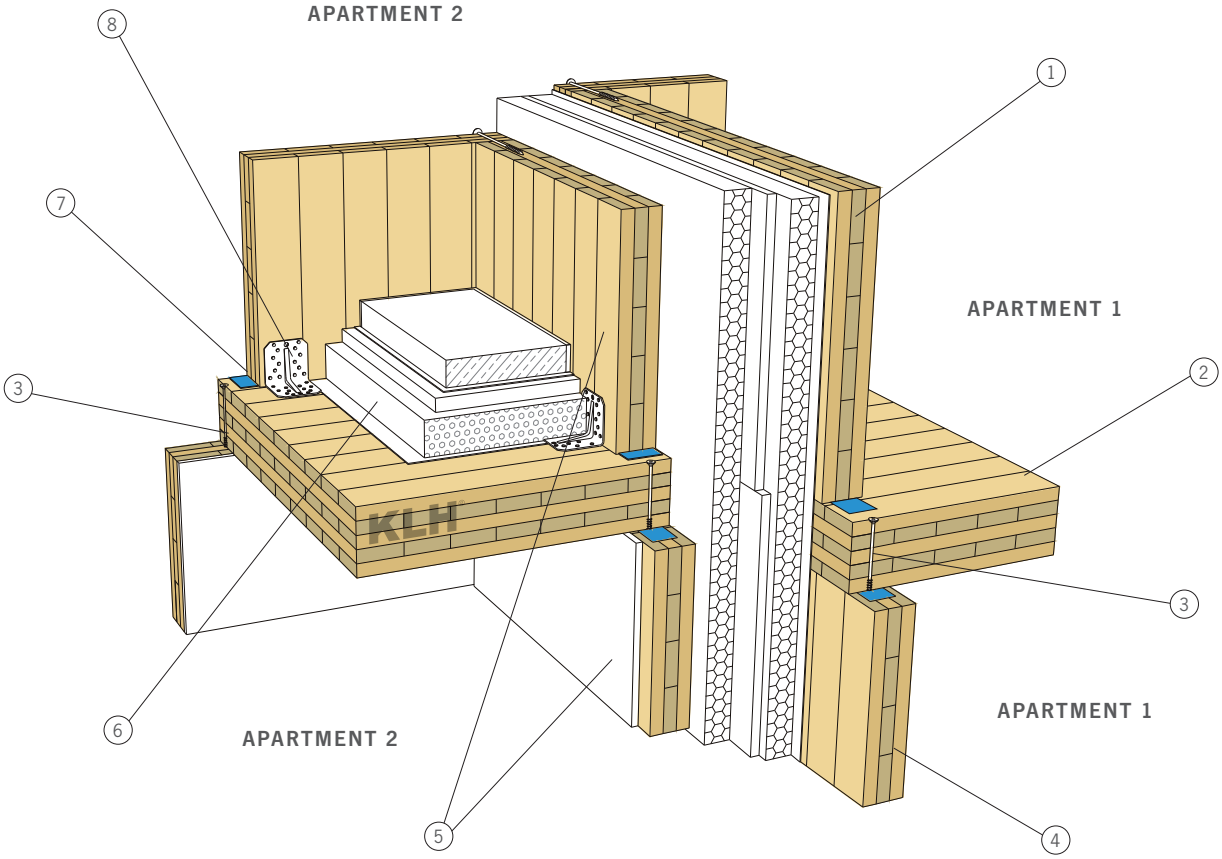

1. Apartment partition
2. KLH® panel – partition ceiling inside apartment
3. Screw connection according to static requirements
4. Load-bearing wall – KLH® wall panel
5. Walls with or without GK planking
6. Floor structure at will, since inside the apartment there are normally no special noise protection requirements
7. Insert sealing tapes, if necessary
8. BMF binder according to static requirements

Apartment partition: WTW 2s 06

$D_{nT,w}$ > 55 (-5;-14) dB
R_w > 64 (-3;-10) dB

Partition structure
15 mm GKF
KLH® wall panel
60 mm Heralan TW
12.5 mm GK plasterboard
60 mm Heralan TW
Flow-tight layer
KLH® wall panel
15 mm GKF

20 DETAIL KLH® – BS 05-2

20.1 CONNECTION OF CEILING – INTERIOR WALL – EXTERIOR WALL

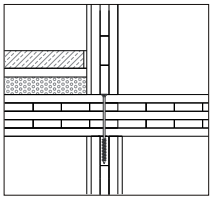

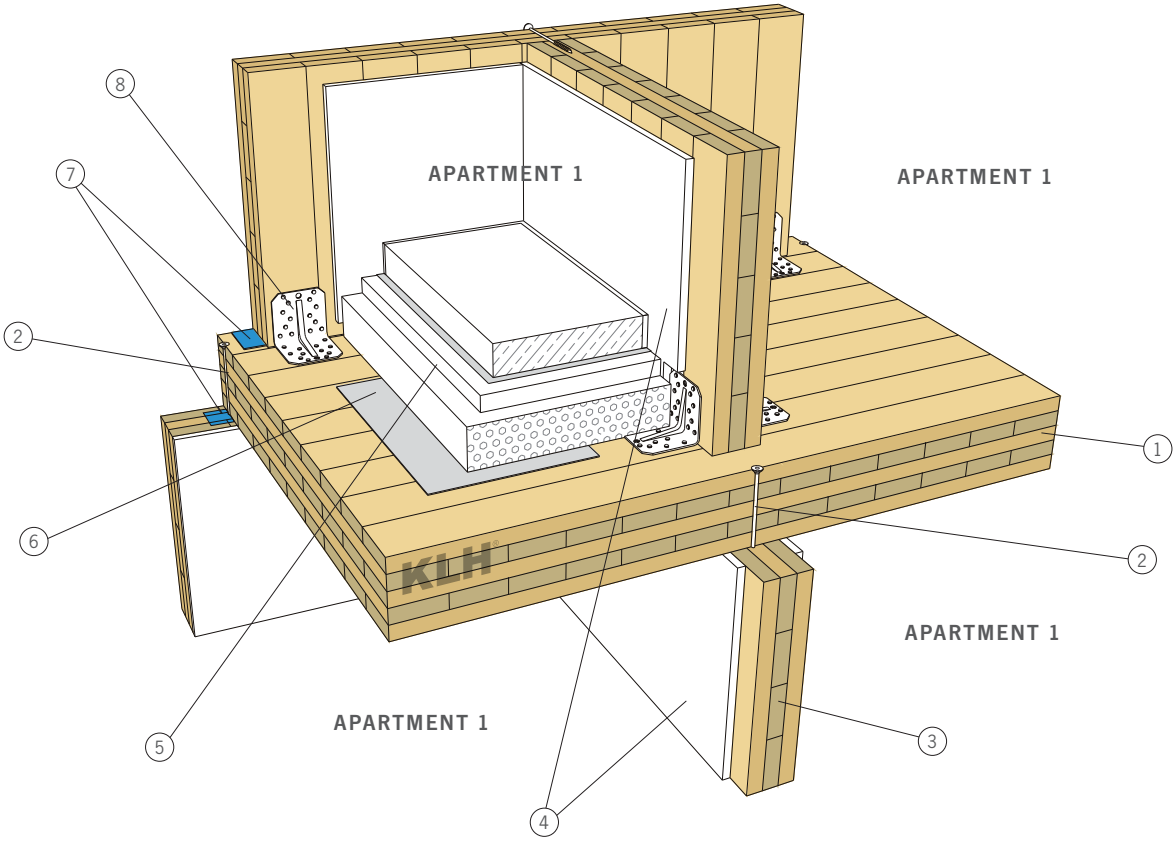

1. KLH® panel – partition ceiling inside apartment
2. Screw connection according to static requirements
3. Load-bearing wall inside apartment – KLH® wall panel
4. Walls with or without GK planking
5. Floor structure as desired, since inside the apartment there are normally no special noise protection requirements
6. Trickle protection, if necessary
7. Insert sealing tapes, if necessary
8. BMF binder according to static requirements

21 DETAIL KLH® – BS 05-3

21.1 CONNECTION OF CEILING – EXTERIOR WALL

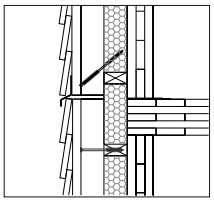

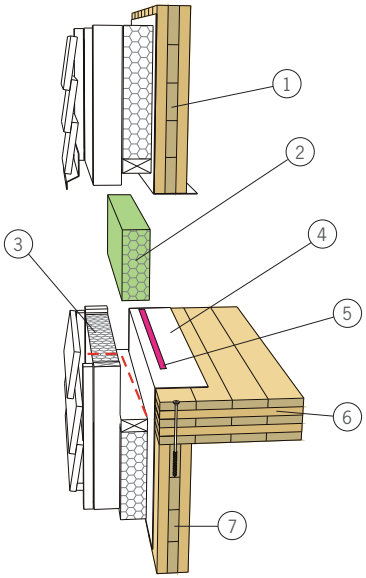

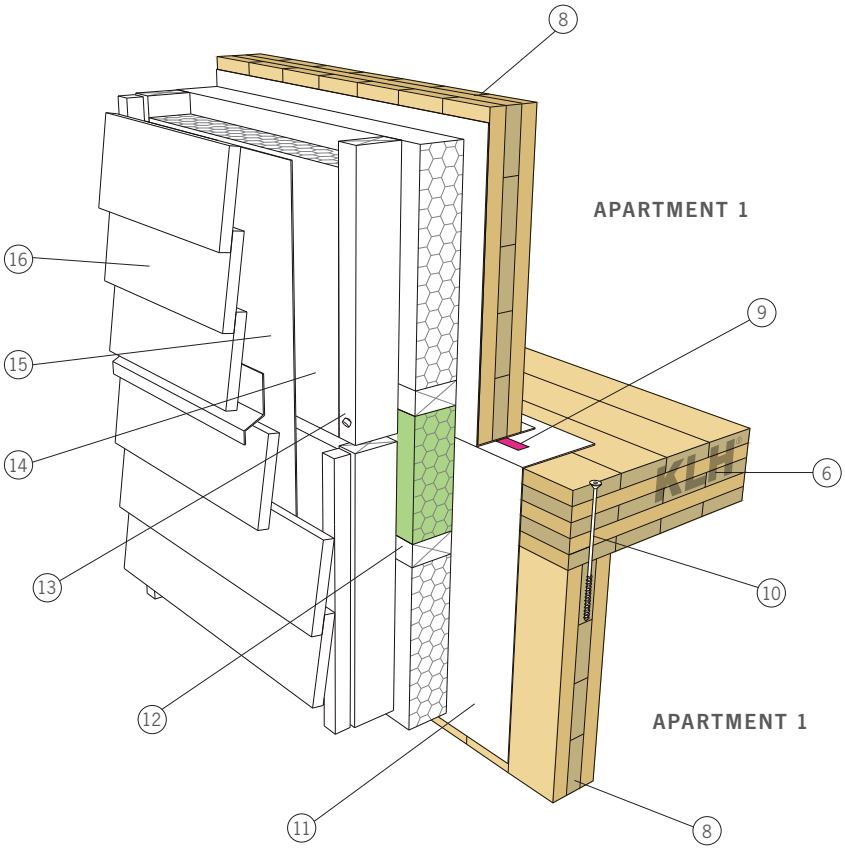

1. Prefabricated wall on upper floor
2. Complete insulation tapes on site
3. Convection barrier during transport
4. Fold in convection barrier
5. Apply sealing tape with glue
6. KLH® ceiling
7. Prefabricated wall on ground floor
8. KLH® wall
9. Connect sealing level
10. Screw connection according to static requirements
11. Convection barrier
12. Horizontal wood only at wall base and wall flanning, vertical wood free-standing between these two wooden elements
13. Screw connection of wooden elements according to static requirements
14. 2-layer insulation level, wooden structure in between
15. Wind proofing
16. Back-ventilated façade

Exterior wall: AW 03

R'_w = 51(-2;-7) dB

Wall structure
Façade – wood
(board, planks – sealed)
Back-ventilation level
(Battens screwed tight with KLH®)
2 x 80 mm rock wool across entire surface
(Heralan FP)
KLH 3s 94 mm
15 mm GKF

NOTES

NOTES

NOTES

KLH MASSIVHOLZ GMBH

Gewerbestraße 4 | 8842 Teufenbach-Katsch | Austria

Tel +43 (0)3588 8835 | Fax +43 (0)3588 8835 415

office@klh.at | www.klh.at